THIS DOCUMENT AND THE DATA DISCLOSED HEREIN OR HEREWITH IS THE PROPERTY OF ALTIUM LIMITED AND MAY BE FREELY DISTRIBUTED IN WHOLE. NO RIGHTS ARE RESERVED OR EXPRESS OR IMPLIED WARANTEE GIVEN.

REVISION	DESCRIPTION	DATE	APPROVED

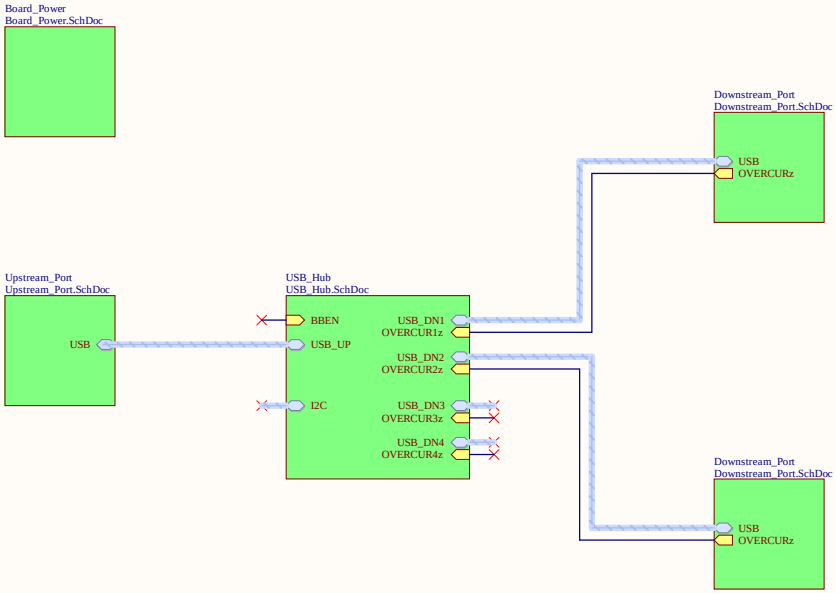

APPROVALS	DATE
ENG: *	
DSN: *	
CHK: *	
REFERENCE DOCUMENTS	
BOM: <BOM DOC NO>	
ASSY DWG: <ASSY DWG NO>	
FAB DWG: <FAB DWG NO>	
PCB DWG: <PCB DWG NO>	

PROJECT

Altium

PROJECT REVISION: | DOCUMENT REVISION: 513178b5 | DESIGN ITEM:

TITLE

USBC Hub

SIZE	CAGE CODE	DWG NO.	REV
B	?????	<SCH DWG NO>	

SCALE: | FILE NAME Top.SchDoc | SHEET 1 OF 5

PROJECT <SCH DWG NO> REV | SHT 1

THIS DOCUMENT AND THE DATA DISCLOSED HEREIN OR HEREWITH IS THE PROPERTY OF ALTIUM LIMITED AND MAY BE FREELY DISTRIBUTED IN WHOLE. NO RIGHTS ARE RESERVED OR EXPRESS OR IMPLIED WARANTEE GIVEN.

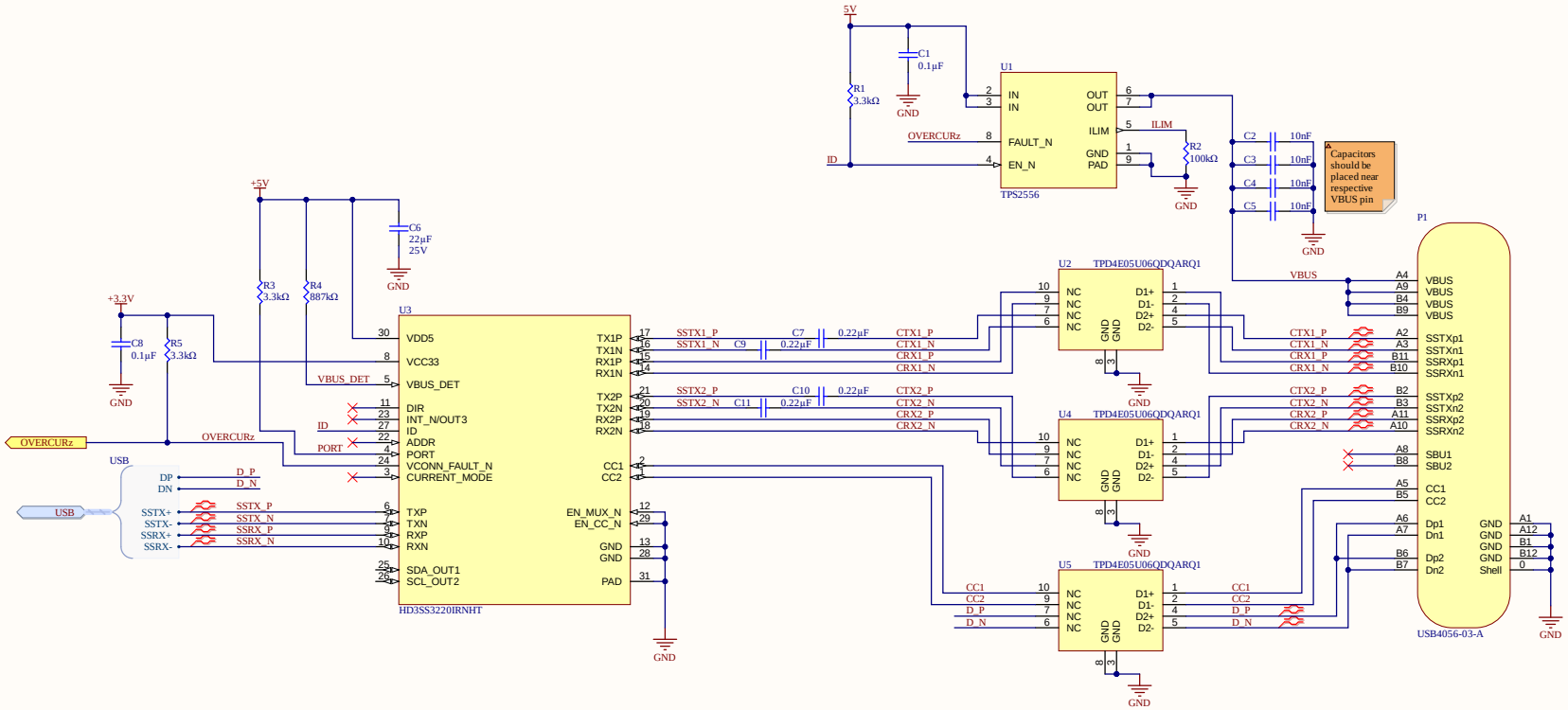

REVISION	DESCRIPTION	DATE	APPROVED

APPROVALS	DATE
ENG: *	
DSN: *	
CHK: *	

REFERENCE DOCUMENTS

BOM:	<BOM DOC NO>
ASSY DWG:	<ASSY DWG NO>
FAB DWG:	<FAB DWG NO>
PCB DWG:	<PCB DWG NO>

PROJECT: Altium

PROJECT REVISION: | DOCUMENT REVISION: | DESIGN ITEM: b0023ebc [Locally Modified]

TITLE: Downstream Port

SIZE	CAGE CODE	DWG NO.	REV
B	?????	<SCH DWG NO>	

SCALE: | FILE NAME: Downstream_Port.SchDoc | SHEET 2 OF 5

THIS DOCUMENT AND THE DATA DISCLOSED HEREIN OR HEREWITH IS THE PROPERTY OF ALTIUM LIMITED AND MAY BE FREELY DISTRIBUTED IN WHOLE. NO RIGHTS ARE RESERVED OR EXPRESS OR IMPLIED WARANTEE GIVEN.

REVISION	DESCRIPTION	DATE	APPROVED

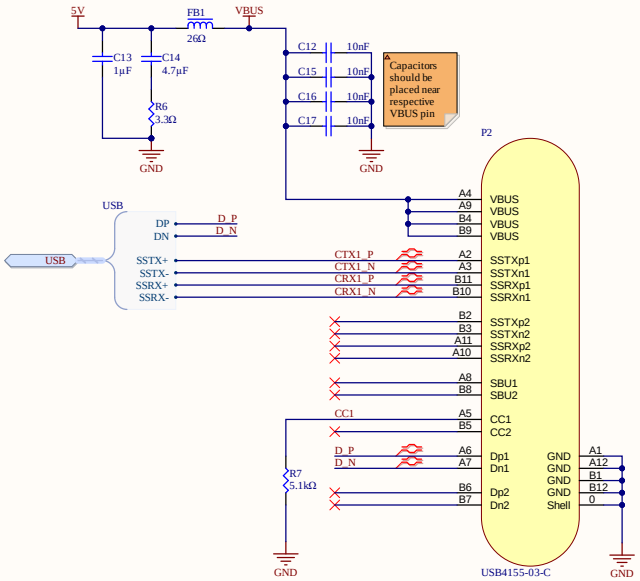

APPROVALS	DATE
ENG: *	
DSN: *	
CHK: *	

REFERENCE DOCUMENTS

BOM: <BOM DOC NO>

ASSY DWG: <ASSY DWG NO>

FAB DWG: <FAB DWG NO>

PCB DWG: <PCB DWG NO>

PROJECT

Altium

PROJECT REVISION: | DOCUMENT REVISION: b0023bbc | DESIGN ITEM:

TITLE

Upstream Port

SIZE	CAGE CODE	DWG NO.	REV
B	?????	<SCH DWG NO>	

SCALE: | FILE NAME Upstream_Port.SchDoc | SHEET 3 OF 5

<SCH DWG NO> 3

THIS DOCUMENT AND THE DATA DISCLOSED HEREIN OR HEREWITH IS THE PROPERTY OF ALTIUM LIMITED AND MAY BE FREELY DISTRIBUTED IN WHOLE. NO RIGHTS ARE RESERVED OR EXPRESS OR IMPLIED WARANTEE GIVEN.

REVISION	DESCRIPTION	DATE	APPROVED

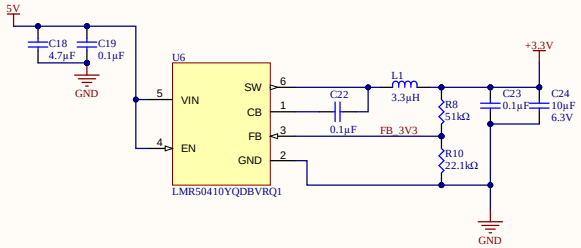

3.3V Buck

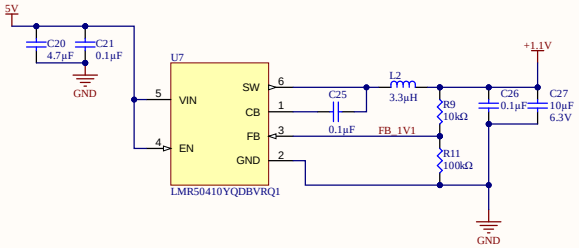

1.1V Buck

APPROVALS	DATE
ENG: *	
DSN: *	
CHK: *	

REFERENCE DOCUMENTS

BOM:	<BOM DOC NO>
ASSY DWG:	<ASSY DWG NO>
FAB DWG:	<FAB DWG NO>
PCB DWG:	<PCB DWG NO>

PROJECT: Altium

PROJECT REVISION: | DOCUMENT REVISION: | DESIGN ITEM: b0023ebc [Locally Modified]

TITLE: Board Power

SIZE	CAGE CODE	DWG NO.	REV
B	?????	<SCH DWG NO>	

SCALE: | FILE NAME: Board_Power.SchDoc | SHEET 4 OF 5

THIS DOCUMENT AND THE DATA DISCLOSED HEREIN OR HEREWITH IS THE PROPERTY OF ALTIUM LIMITED AND MAY BE FREELY DISTRIBUTED IN WHOLE. NO RIGHTS ARE RESERVED OR EXPRESS OR IMPLIED WARANTEE GIVEN.

REVISION	DESCRIPTION	DATE	APPROVED

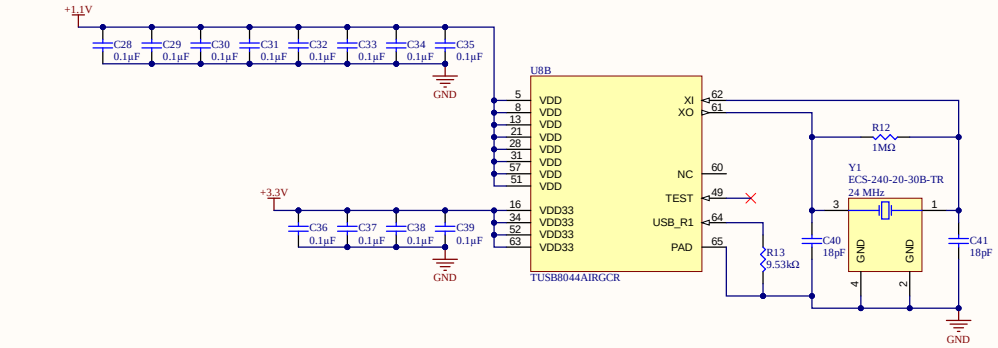

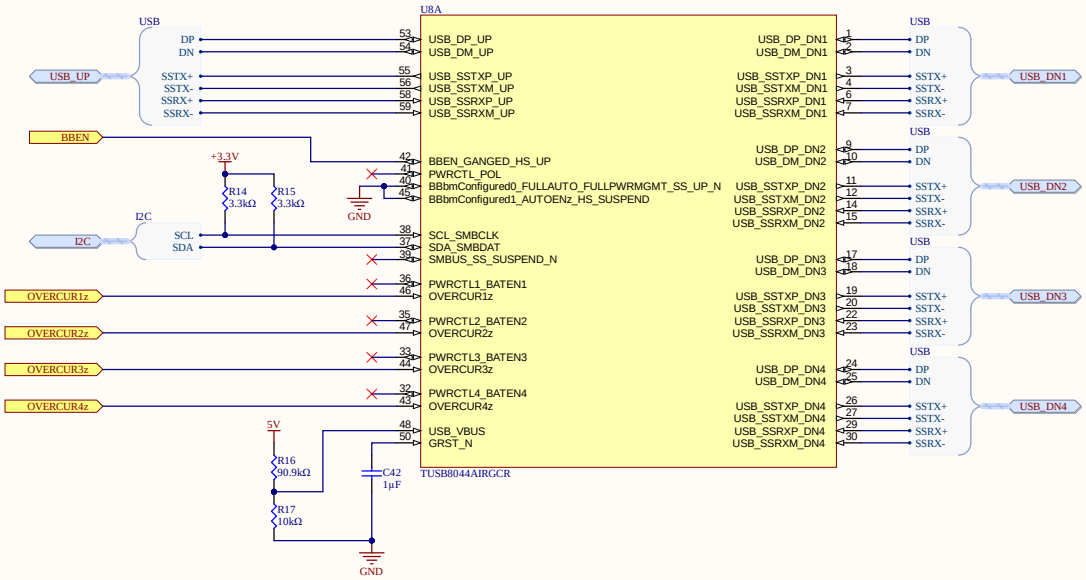

APPROVALS	DATE
ENG: *	
DSN: *	
CHK: *	

REFERENCE DOCUMENTS

BOM:	<BOM DOC NO>
ASSY DWG:	<ASSY DWG NO>
FAB DWG:	<FAB DWG NO>
PCB DWG:	<PCB DWG NO>

PROJECT: Altium

PROJECT REVISION: | DOCUMENT REVISION: b0023bbc | DESIGN ITEM:

TITLE: USB Hub

SIZE	CAGE CODE	DWG NO.	REV
B	?????	<SCH DWG NO>	

SCALE: | FILE NAME: USB_Hub.SchDoc | SHEET 5 OF 5